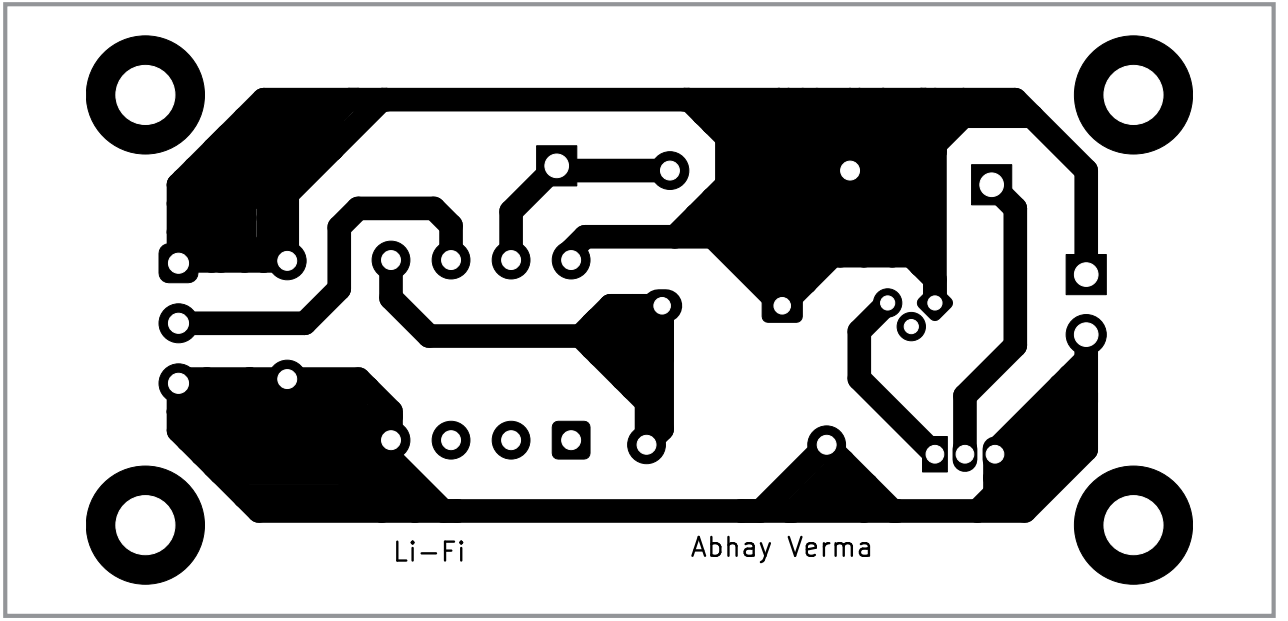

Fig. 5: Actual-sized PCB of the Li-Fi transceiver module